California Faucets®

Tamalpais™

STYLETHERM TRIM ONLY W/ DUAL VOLUME CONTROL

TO-THC2L-74

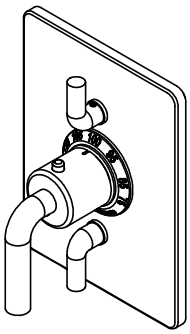

Features
- *All brass construction*
- *100˚F safety stop button with manual override*
- *Dual integral volume control*
- *7-7/8" by 5-7/8" rectangular faceplate*
- *Less head, arm, flange and spout*
- *Engraved brass temperature ring*
- *Over 30 finishes including 15 PVD finishes*

Codes/Standards Applicable
Product meets or exceeds the following:
- *ASME A112.18.1/CSA B125.1*
- *ASSE 1016*
- *ADA compliant*

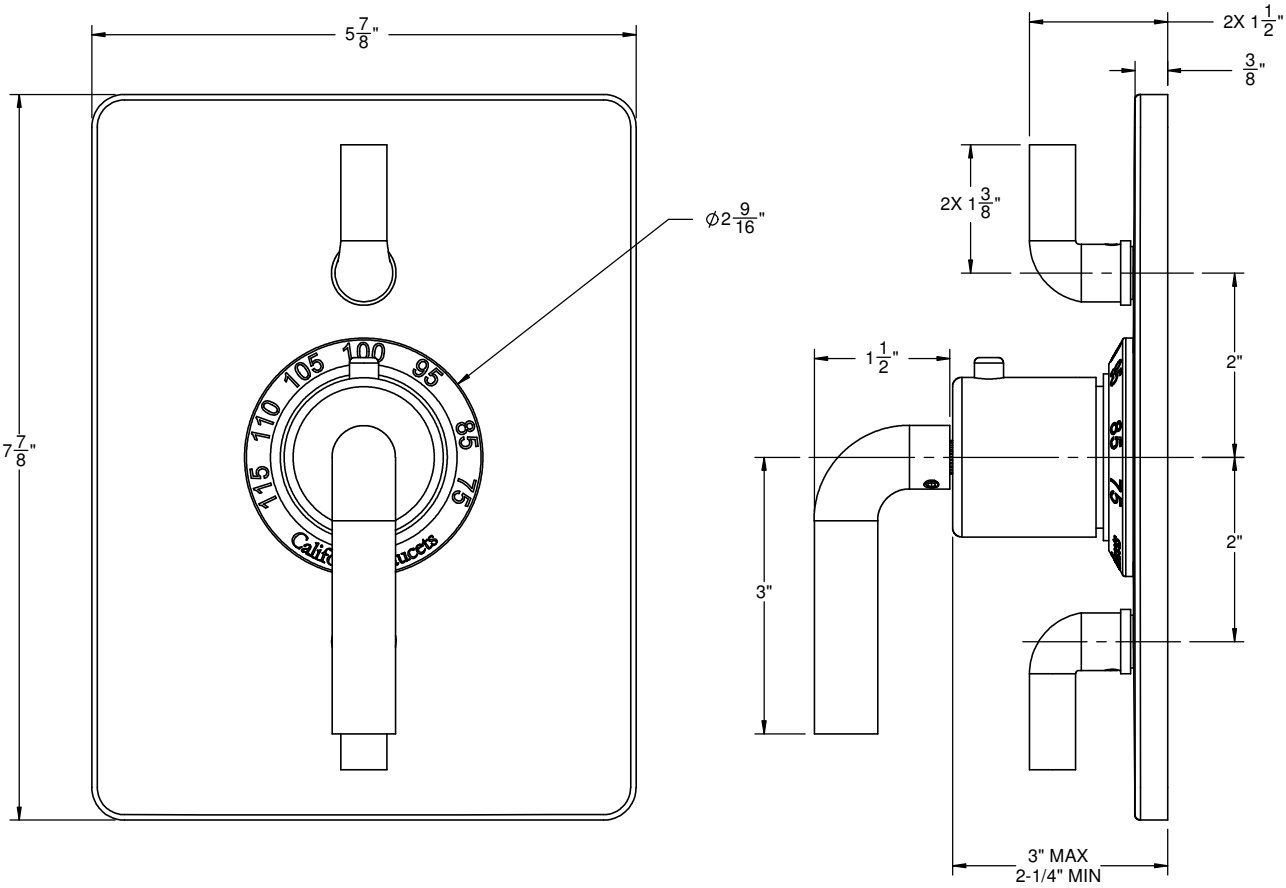

ALL DIMENSIONS SHOWN TO NEAREST 1/16"