D461735
Versa™
30" Slide Bar Assembly with Florin® Handshower

SPECIFICATIONS

Features/Benefits

- 2.0 gpm (7.6 L/min) Max Flow @ 80 psi
- 5 Functions: Wide, Centerjet, Aeration, Massage and Wide + Centerjet
- Dual Valve™ Technology Optimizes Water Flow
- Easy-Glide™ Selector Ring
- Easy Clean Nozzles
- Integral Check Valve
- Angle and Height Adjustable
- Includes Slide Bar, D469700, Handshower, D462038, and 72" Metal Shower Hose, D469020
- Supply Elbow Sold Separately

Available Color/Finishes

Color	Description
	Chrome

Please see gerberonline.com or current price list for available finishes. Finish is defined by additional suffix.

Standards & Certifications

Flow Rate

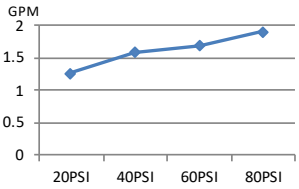

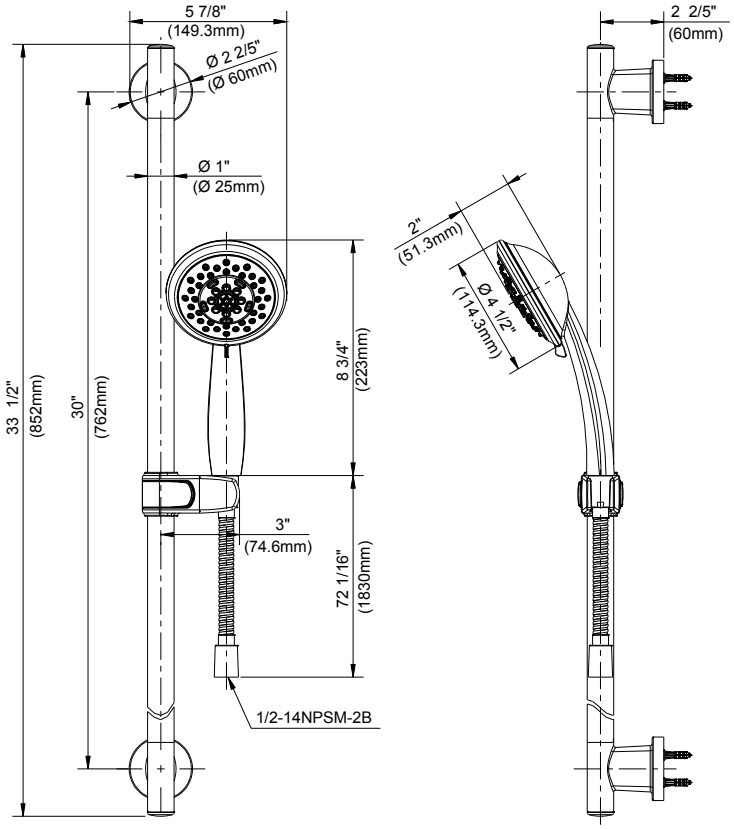

Submittal Information:

Name: _____ Contractor: _____

Location: _____ Contact #: _____