NOTES:

(N1) 1. FIT / FORM / FUNCTION SHALL FOLLOW PS-E.008.

△2 APPLY LOCTITE 680.

BILL OF MATERIAL (CURRENT LEVEL)

ITEM	PT/ASSY	DESCRIPTION	TYPE	QTY.
1	40842	ROSETTE	PART	1
2	40380	SINGLE ROBE HOOK ARM	PART	1
3	40843	HOOK FINAL	PART	1
4	02XXG	MOUNTING BRACKET	PART	1
5	1-206	HARDWARE PACK	ASSEMBLY	1
6	92031	SCRW, M6 X 1 X 6 SKT HD CUP PT W/ SELF LOC SS	PART	1
7	10615	HEX KEY, 3MM ALLOY STEEL	PART	1

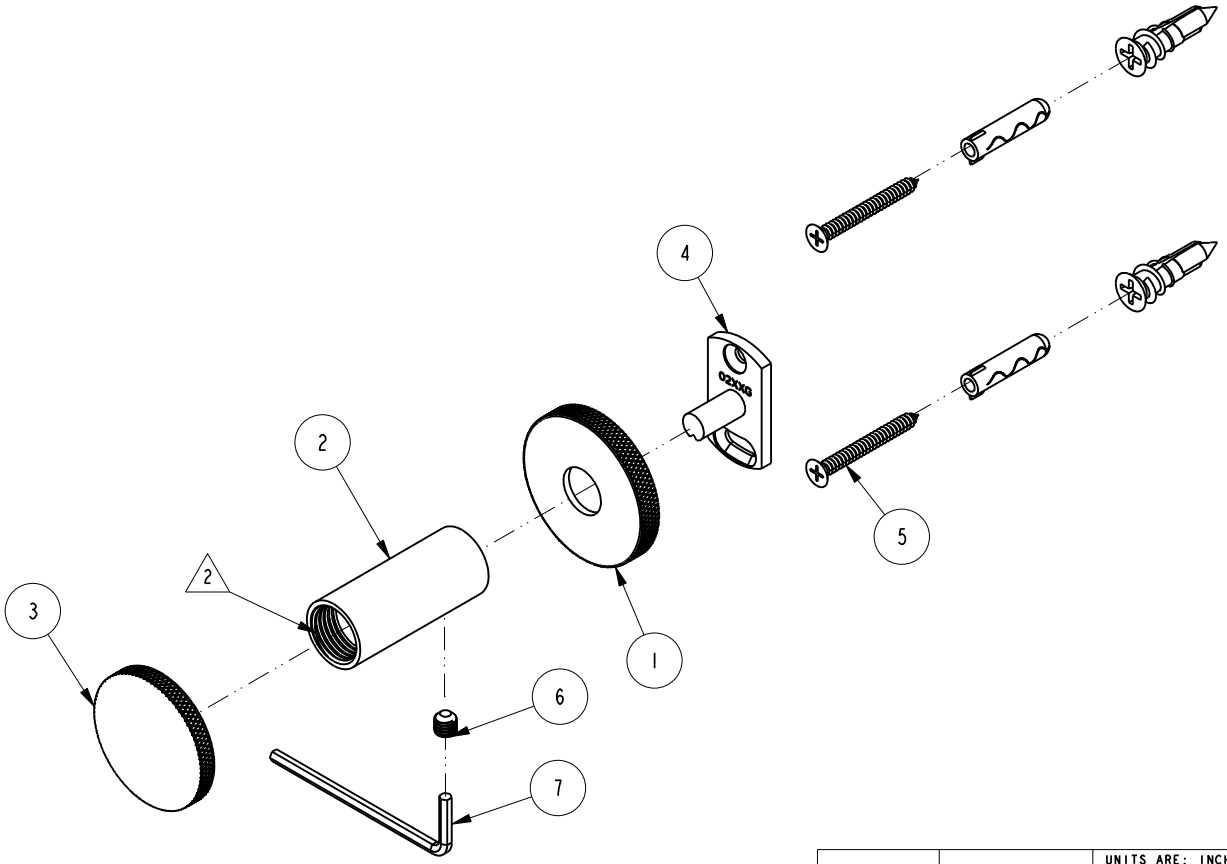

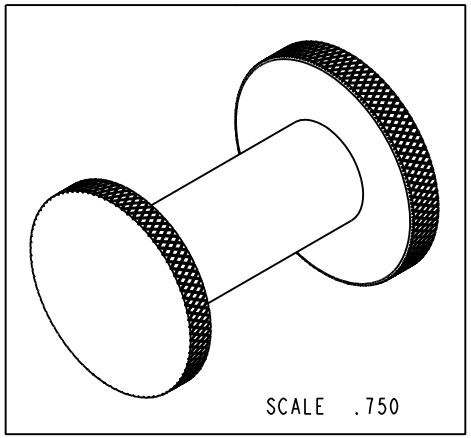

George Bazan Digitally signed by George Bazan Date: 2020.07.06 14:40:28 -07'00'

ZONE	REV	DESCRIPTION	DATE	APPROVED
-	-	EN-4115	05/15/20	J.M.

COPYRIGHT 2005 BRASSTECH, INC. THESE DRAWINGS AND THE DESIGNS DEPICTED HEREIN ARE THE PROPRIETARY PROPERTY OF BRASSTECH. ANY USE OR REPRODUCTION IS SUBJECT TO THE EXPRESS APPROVAL OF BRASSTECH. UNAUTHORIZED USE IS STRICTLY PROHIBITED. ALL RIGHTS RESERVED.

		-	-
TESTING	-	-	-
ASSEMBLY	-	-	-
PLATING	-	-	-
POLISHING	-	NEXT ASSY	USED ON
MACHINING	-	APPLICATION	
TOOLING FIXTURE #		REMOVE ALL BURRS AND SHARP EDGES	

UNITS ARE: INCHES [MM]
TOLERANCES ARE:

FRACTIONS	DECIMALS	ANGLES
±1/16"	.X ±.1 [2,5]	±1°
	.XX ±.06 [1,5]	

(X.XXX) DENOTES CRITICAL DIMS.
ALL THREADS ARE CRITICAL

DRAWN	JINSON	05/15/20
CHECKED	J.M.	05/15/20
APPROVED	J.M.	05/15/20

BRASSTECH INCORPORATED
2001 CARNEGIE AVE.
SANTA ANA, CA 92705
(949) 417-5207

SINGLE ROBE HOOK

DWG NO. 3290-1650 REV -

SCALE .500 REF. - SHEET 1 OF 2

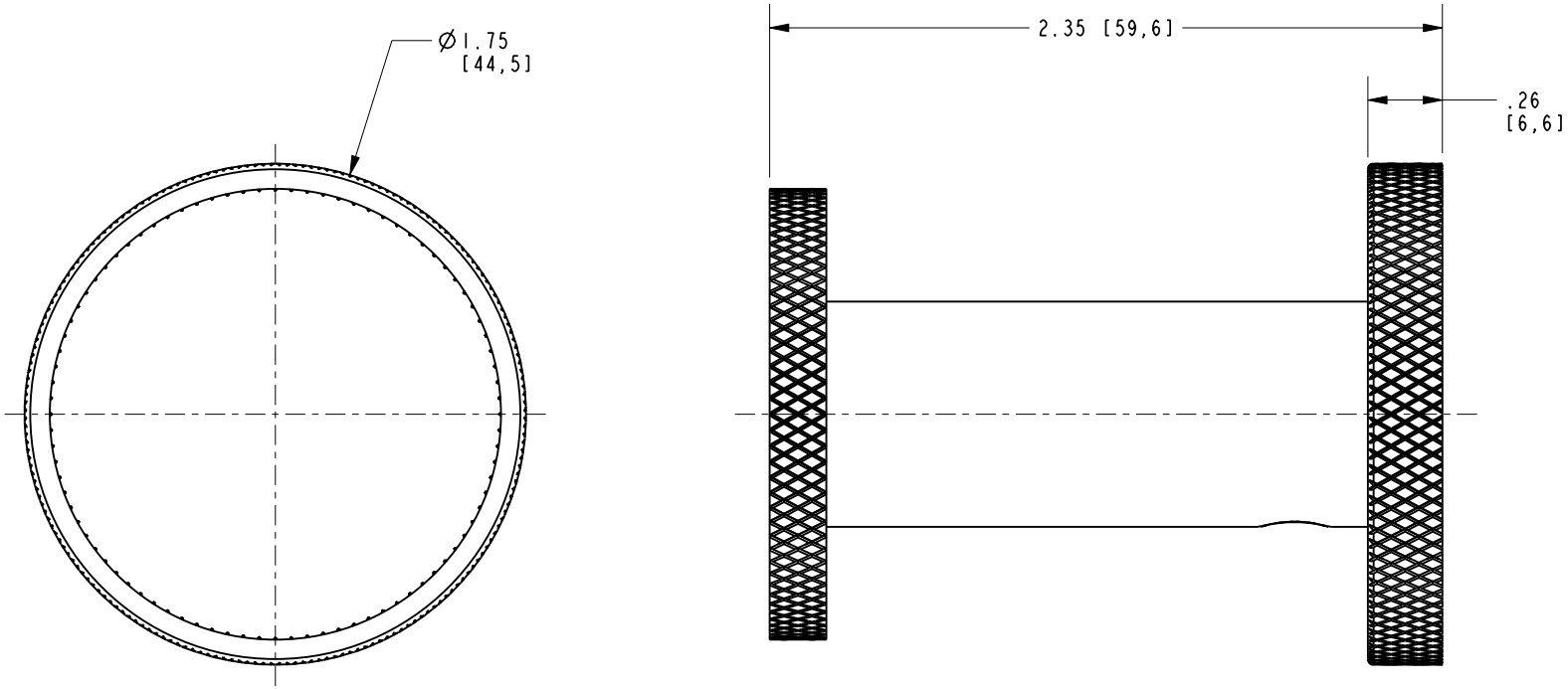

BRASSTECH INCORPORATED

2001 E. CARNEGIE AVE.
SANTA ANA, CA 92705
(949) 417-5207

DWG NO. 3290-1650		REV -
SCALE 1.500	REF. -	SHEET 2 OF 2