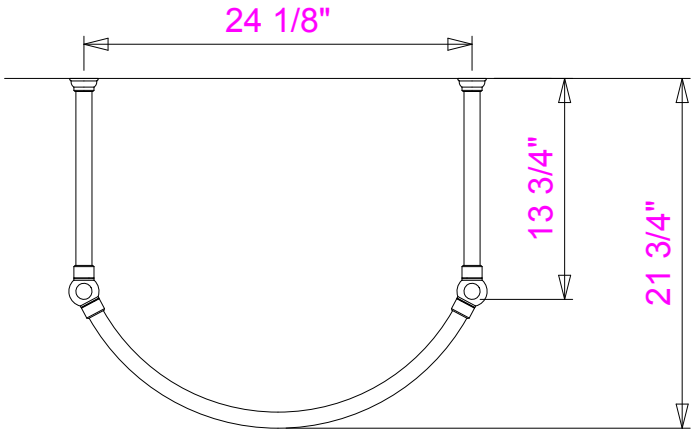

TOP VIEW

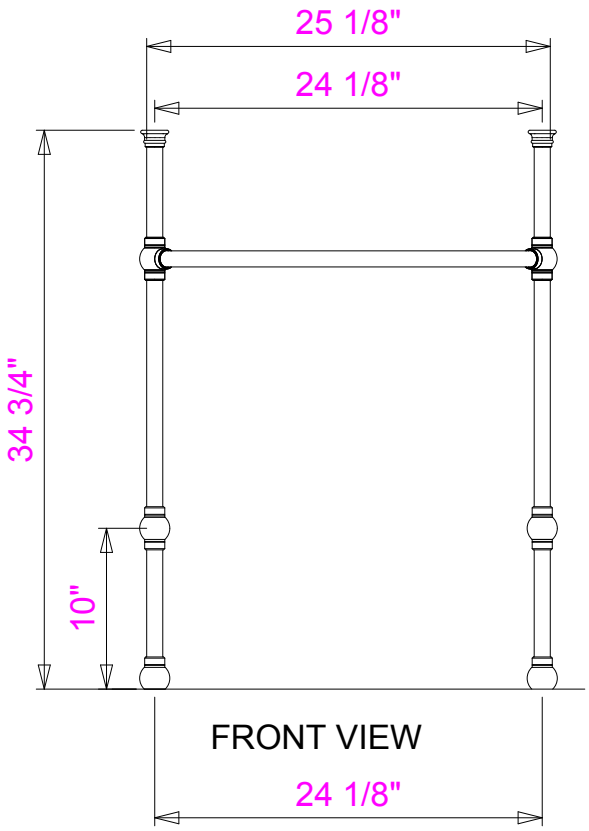

FRONT VIEW

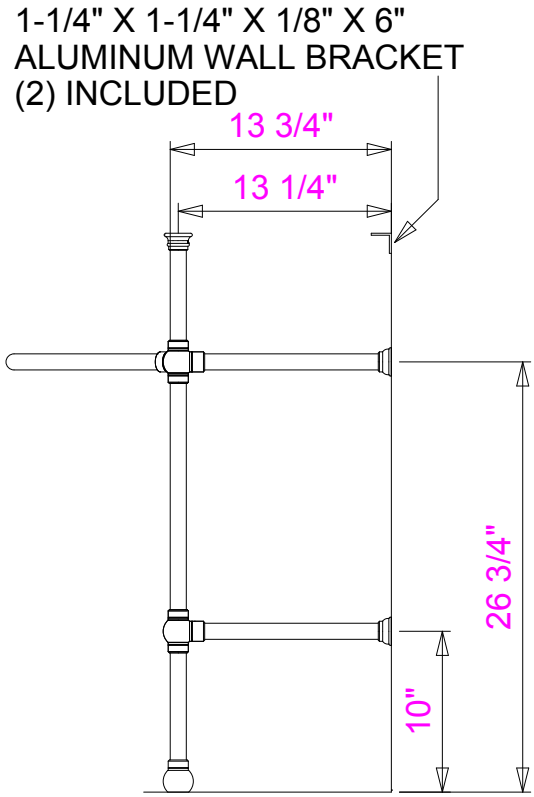

SIDE VIEW

REV	CHANGE(S)	BY	DATE

REMARKS PALMER LS21BLSFPR BALL FOOT MODEL LEG SYSTEM FOR STONE FOREST PETITE RENAISSANCE C92-WL30	DRAWER	JB	6/20/13	DESCRIPTION(S)	PALMER INDUSTRIES
	MATERIAL	BRASS		LEG SYS 2 LEG BALL FOOT	379 Charles Street Providence, RI 02904 Phone: 800-398-9676 Fax: 401-421-4238 email: jamie@sinklegs.com
	FINISH			PART NUMBER(S)	
	PL-0147			LS21BLSFPR	

These designs and drawings are confidential, and the exclusive property of Palmer Industries.
They may not be disclosed or duplicated without the expressed, written consent of Palmer Industries.
Copyright circa 2012 Palmer Industries. All rights reserved.